VPM-2G

VSYS

Heavy Duty Projector Ceiling Mount

Compatible with Projectors Up to 35kg/77lbs

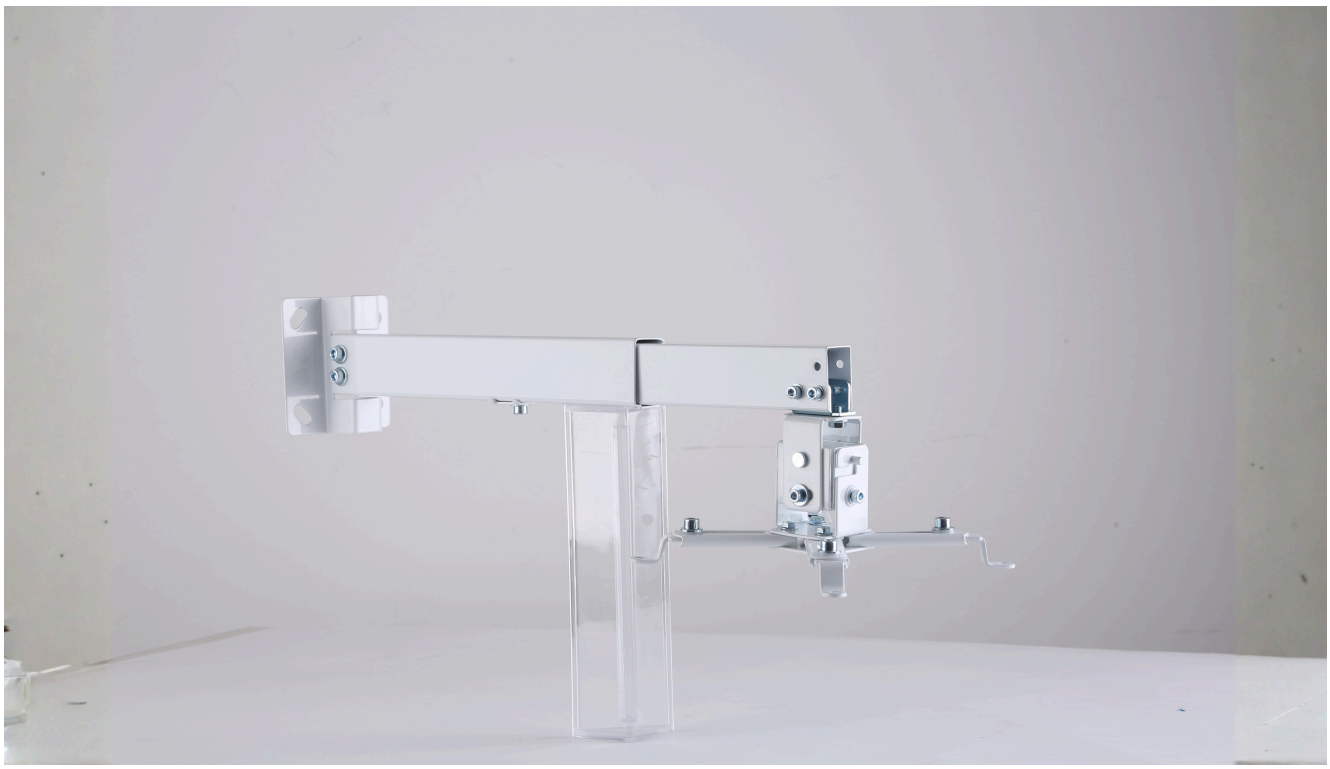

Ceiling Mount Orientation

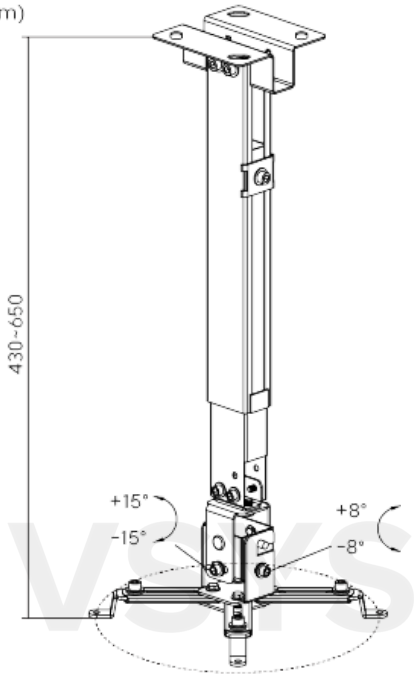

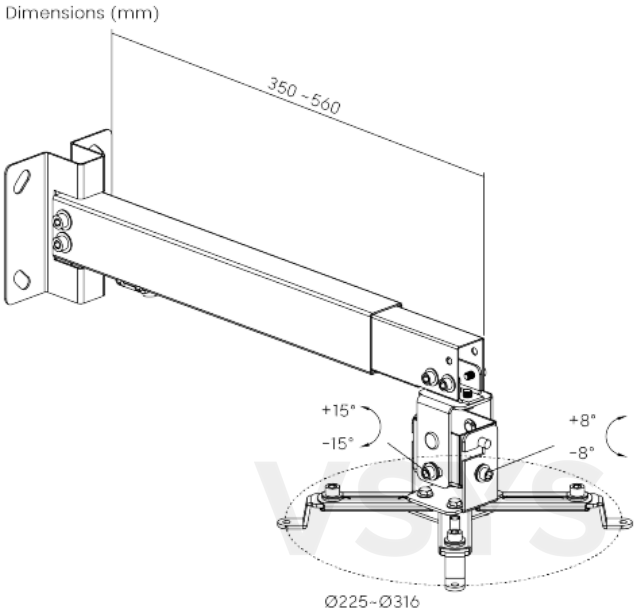

Wall Mount Orientation

Swivel Range
+8° ~ -8°

Tilt Range
+15°~-15°

Dimensions
237x203x650mm
(9.3"x8"x25.6")

Weight Capacity
20kg (44lbs)

Mounting Range
225~316mm
(8.9"~12.4")

Extension Range
430~650mm
(16.9"~25.6")

Product Category:	Projector Mount
Rank:	Economy
Material:	Steel
Surface Finish:	Powder Coating
Color:	Matte Black,Gloss Grey,Matte White
Dimensions:	237x203x650mm (9.3"x8"x25.6")
Weight Capacity:	20kg (44lbs)

Mounting Range:	225~316mm (8.9"~12.4")
Tilt Range:	+15°~-15°
Swivel Range:	+8°~-8°
Extension Range:	430~650mm (16.9"~25.6")
Installation:	Solid Wall,Ceiling Mounted
Cable Management:	Yes
Accessory Kit Package:	Normal/Ziplock Polybag